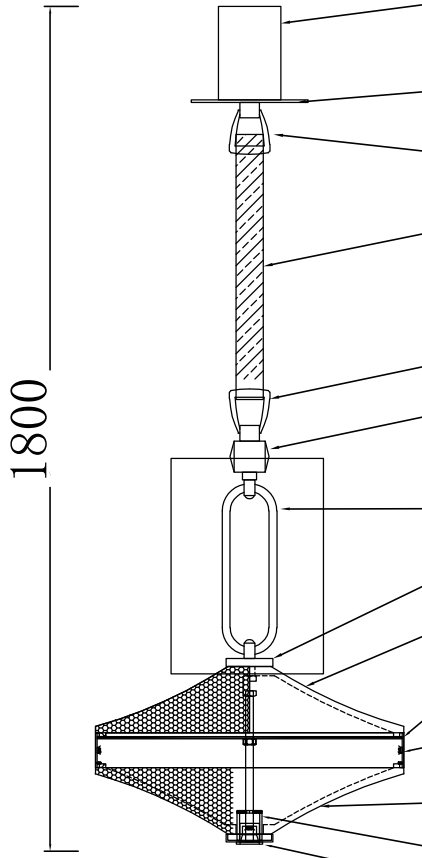

Φ80*H120Cylinder, disc seal one end, side dotted heat dissipation hole, with side lock half-I-shaped hanging plate-1pcs

Φ150*T3Discs, medium holes11-1pcs

Zinc alloy belt buckle, with W35 belt-2pcs

W35*H1150Belt. Equipped with 2 leather buckles-2pcs

M10 Dental Lifting Ring, Wire Cut Welding,-2pcs

40*40*H40 copper decorative parts, medium hole 11,-1pcs

10*10 pipe weldments. Figures. Two M10 internal teeth. Wire crossing-1pcs

Φ65*H10 flat cover, medium hole 11-1pcs

Φ395*H90 checkered glass dish. Medium hole 13-1pcs

Φ391*H35Wire cut solder rings

LED strip light, L1230mm with driver-1pcs

Φ395*H90 checkered glass dish. Medium hole 42-1pcs

Φ60*H40Composite weldments

Cut-out 28-LED spotlight-1W-1pcs

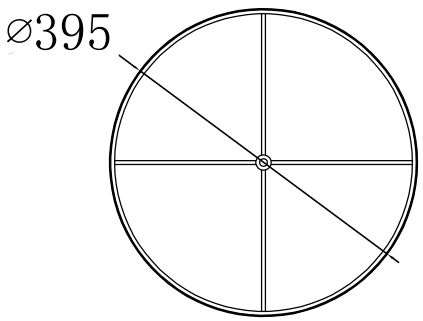

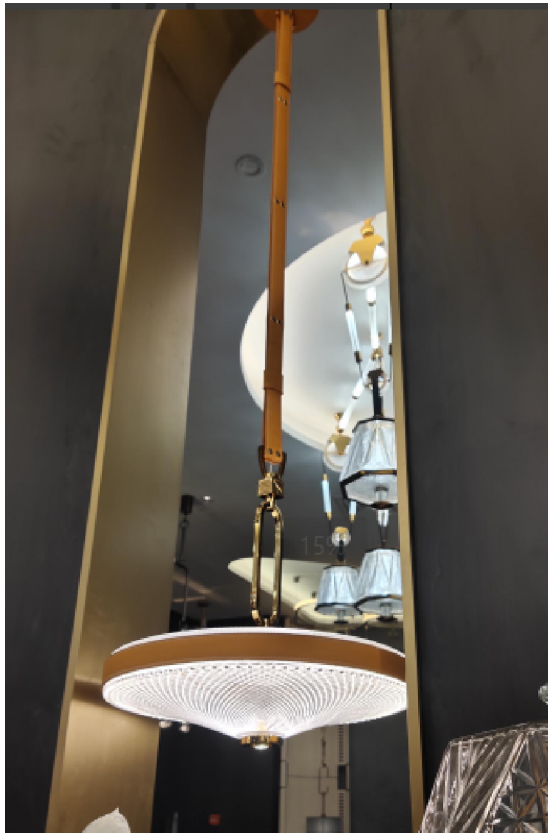

United States Joaji-4#